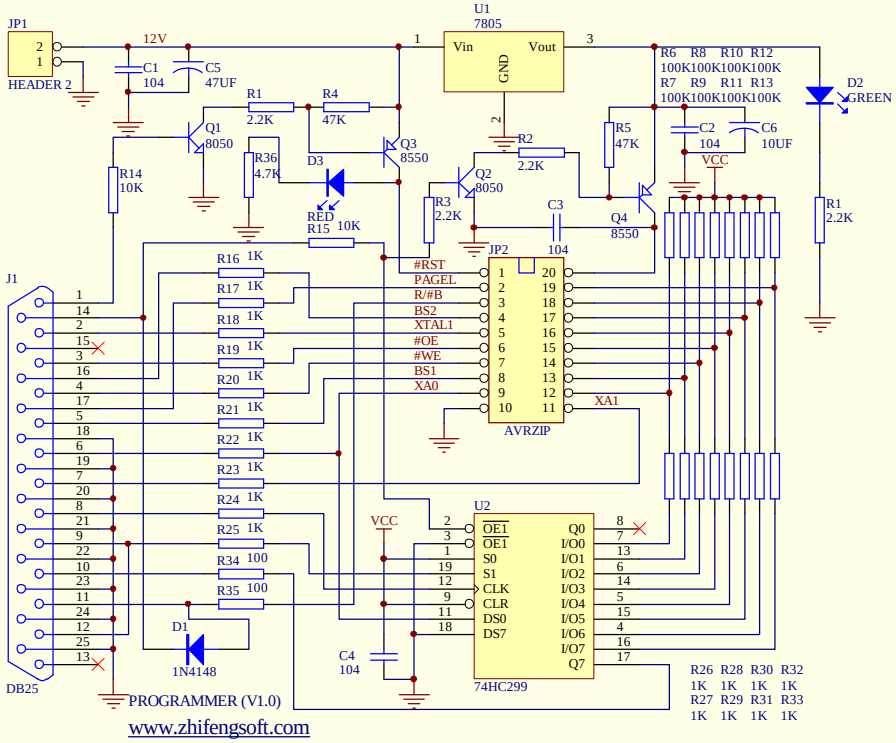

Title	AVR PROGRAMMER WWW.ZHIFENGSOFT.COM	
Size A4	Number	Revision
Date: 9-Mar-2006		Sheet of
File: D:\avrgccidesrc\myusbasp\circuit\AVR JTAG.DDB		Drawn By: