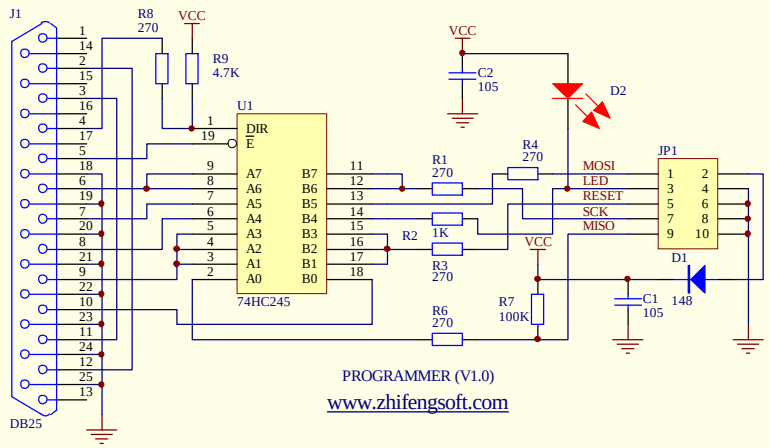

Title		
Size A4	Number	Revision
Date: 9-Mar-2006	Sheet of	
File: D:\avrgccidesrc\myusbasp\circuit\AVR JTAG.DDB	Drawn By:	